**ALLEN&HEATH**
**WORLD CLASS MIXING**

www.allen-heath.com/zed
www.myspace.com/thezedspace

sales@allen-heath.com t:+44 (1326) 372070

ALLEN&HEATH

# ZED R16

## 16 Channel FireWire Recording Mixer


TECHNICAL SPECIFICATIONS

Operating Levels

**Inputs**
Mono channel (XLR) Input -6 to –60dBu for nominal (+14dBu in max)
Mono channel Line Input (Jack socket) +14 to –40dBu (+34dBu maximum)
Insert point (TRS Jack socket) 0dBu nominal +21dBu maximum
Stereo Input (Jack sockets) 0dBu nominal (control = Off to +10dB)
Stereo input (phono sockets) 0dBu nominal (control = Off to +10dB)
2 Track Input (phono sockets) 0dBu nominal +21dBu maximum

**Outputs**
Min (2 Track 1) L-R (XLR) +4dBu nominal. +27dBu maximum.
L-R Insert (TRS Jack socket) 0dBu nominal +21dBu maximum
2 Track 2 Outputs (Jack sockets) 0dBu nominal. +21dBu maximum.
All other analogue outputs 0 nominal +21dBu maximum

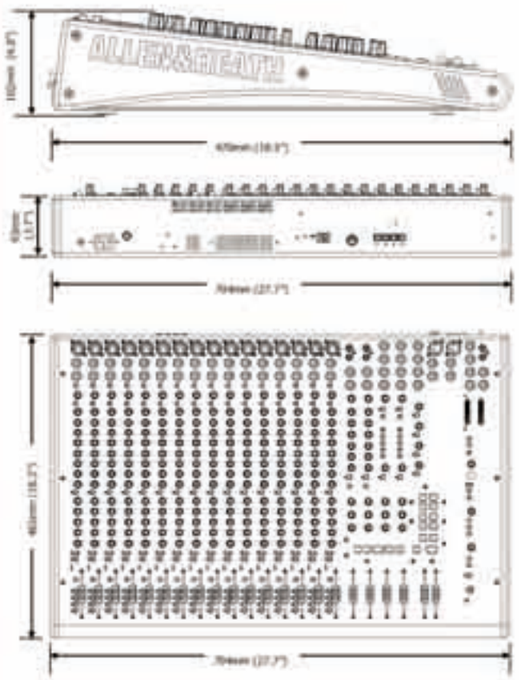

| Weight kg (lb) | | |
|---|---|---|
| | Unpacked | Packed |
| ZED-R16 | 14 (31 lb) | 17.5 (38.5 lb) |

**Frequency Response**
Mic in to Mix L/R Out, 30dB gain +/-0.5dB 20Hz to 140kHz.
Line in to Mix L/R out 0dB gain +/-0.5dB 20Hz to 20kHz
Stereo in to Mix L/R out +/-0.5dB 20Hz to 40kHz

**THD+n**
Mic in to Mix L/R Out, 6dB gain 1kHz +10dBu out 0.0025%
Mic in to Mix L/R Out, 30dB gain 1kHz 0.0045%
Line in to Mix L/R out 0dB gain +10dBu 1kHz 0.003%
Stereo in to Mix L/R out 0dB gain +10dBu 1kHz 0.004%

**Headroom**
Analogue Headroom from nominal (0Vu) 21dB
Digital converter headroom from nominal analogue (0Vu) 16dB

**Digital Performance**
Analogue to Digital conversion 24bit 114dB dynamic range (A wtd)
Digital to Analogue conversion 24bit 118dB dynamic range (A wtd)
Sample Rate 44.1, 48, 88.2, 96kHz

**Noise**
Mix Noise, LR out, 16 channels routed, Ref +4dBu, 22-22kHz -88dB (-84dBu)
Mix Noise, Aux 1-4 out, sends minimum, masters at unity 22-22kHz -86dBu
Mic Pre EIN @ 60dB gain 150R input Z 22-22kHz -128.5dBu

**MIDI**
Fader and Rotary values 0-127
MIDI switches Note on/note off
Transport control MIDI machine control
MIDI channel Default 16. User settable

Power consumption 48W

JetPLL™

**TC Applied Technologies JetPLL™ jitter reduction technology.**

- Ensures our analogue/digital converters work to their optimum level, and allow great separation between channels.
- Filters jitter by 100dB, preventing audio artefacts caused by interference patterns between timing clocks.
- Allows fast synchronisation to other networked devices and compatibility with a wide range of audio equipment.



AP7347

## We are delighted to present Allen & Heath's first true recording mixer for over 10 years.

The ZED-R16 is a superbly equipped console with the crucial parts of the recording process in one box. The best performing preamp in Allen & Heath's entire range is packaged with a high quality analogue to Firewire interface and the most extensive EQ on any mixer at this price point (or even twice the price!) An analogue channel strip so well featured, which sounds this good, is a real find at this level.

The Allen & Heath ZED-R16 combines an analogue recording mixer with a FireWire soundcard, MIDI controls and ingenious 'home-studio' routing so you can build tracks in the studio, record live gigs, mix-down, remix... all through warm analogue circuitry, 4 band fully parametric classic British EQ and out to crisp, precise digital format.

# ZED R16

### Focus of the studio

ZED-R16 combines an imaginative feature set with professional build quality to create the ideal centrepiece for any project studio with big ideas, or larger studios with dedicated live rooms.

The ZED-R16 is an exceptional recording mixer coupled with recording studio features. Control room speaker and alternate speaker outputs, plus two separate artist monitor feeds are provided. In addition to the digital interface, two analogue recording outputs are also available. The ZED-R16 even has a dedicated internal condenser talkback mic.

Features such as the dual function audio/MIDI faders and built in sequencer transport were dreamed up by engineers here at A&H who have home studios themselves, so they've made sure they've built in features they really need.

The internal soundcard features 18 FireWire inputs and 18 outputs plus 16 ADAT I/O. Each channel on the mixer has its own independent soundcard channel so instruments can be recorded simultaneously (pre or post EQ) and into the sequencer separately. To minimise clock jitter and provide synchronicity between the ZED-R16 and other devices, the mixer is equipped with the professional JetPLL™ digital audio chipset.

### Mix-down and live

In addition to multi-track recording, the ZED-R16 allows mixing down in analogue, then recording back into the computer in digital. The bundled SONAR LE software makes this a breeze.

The story doesn't stop here however - ZED-R16 can be a versatile live FOH mixer too. In this mode, its 4 aux buses become foldback feeds and FX sends, and the main XLR outputs feed the PA system. Recording the live gig is straightforward; the record feed signal can be easily assigned using the four buttons next to the faders.

# THE ESSENTIAL MIX


**PREAMP**
The ZED-R16 has a two stage pre-amp design, which allows carefully controlled amounts of gain in each stage. This low-noise design utilises the same components and has a similar design to those in our large touring desks - so ZED's sound quality is assured.

**EQ**
Complete with two swept, fully parametric mids, and high and low shelving EQ, the ZED-R16 has a sophisticated equalisation section without rival in this section of the market. It has much in common with our class-leading pro touring mixers. Forty years of analogue mixer design has given us an unparalleled knowledge of filtering.

**AUX SENDS**
Two pre and two post aux buses can be used as feeds for headphone amplifiers in the studio, FX sends anywhere, or wedge foldback live. The talkback function is either routed to the aux or studio outputs, so is ideal for any environment.


**STUDIO FEEDS**
Similar to the matrix function on A&H ML, GL and Wizard mixers, two separate live room mix feeds can be individually fed from aux buses or the LR main mix. Foldback to the musicians can be tailored to give the bassist a drum heavy mix and the vocalist (in a separate booth) more keys…

**MONITOR SECTION**
The ZED-R has two signal paths for monitoring: an output for main control room monitors and outputs for an alternative set of monitors for checking mixes. The control room mix can follow either of the two main analogue outputs or the digital main mix, allowing access to all main audio outs.

**MIDI SOFTWARE CONTROL**
The MIDI section on the ZED-R has been designed to control software transport, with extra mappable controllers ready to be user assigned. With recording now truly in the digital age, ZED-R16 brings the home studio bang up to date.

In addition to the ZED-R16's dedicated MIDI controls, all of the channel faders can be switched to become MIDI controllers.

**FIREWIRE**
The digital audio connections are all present on the rear of the desk. Two FireWire connectors allow the ZED-R to be connected to a personal computer whilst the second socket daisy-chains devices. Two switches change the sample rate and routing selection, while 4 connectors allow input and output to ADAT equipment.

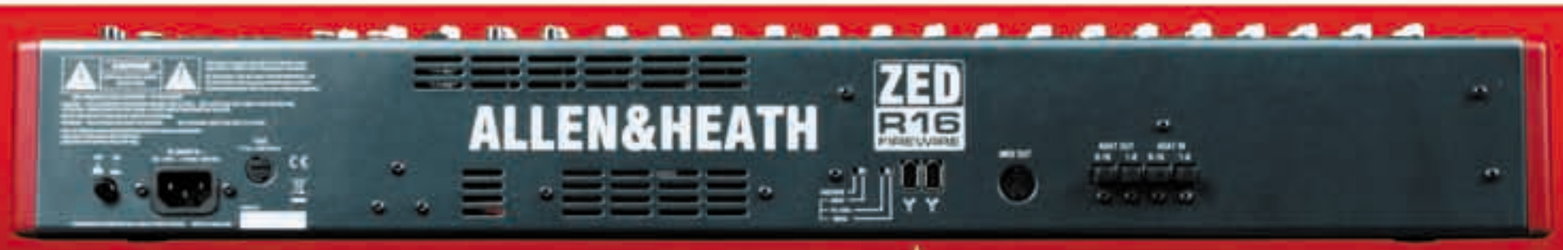

## Home Studio Setup

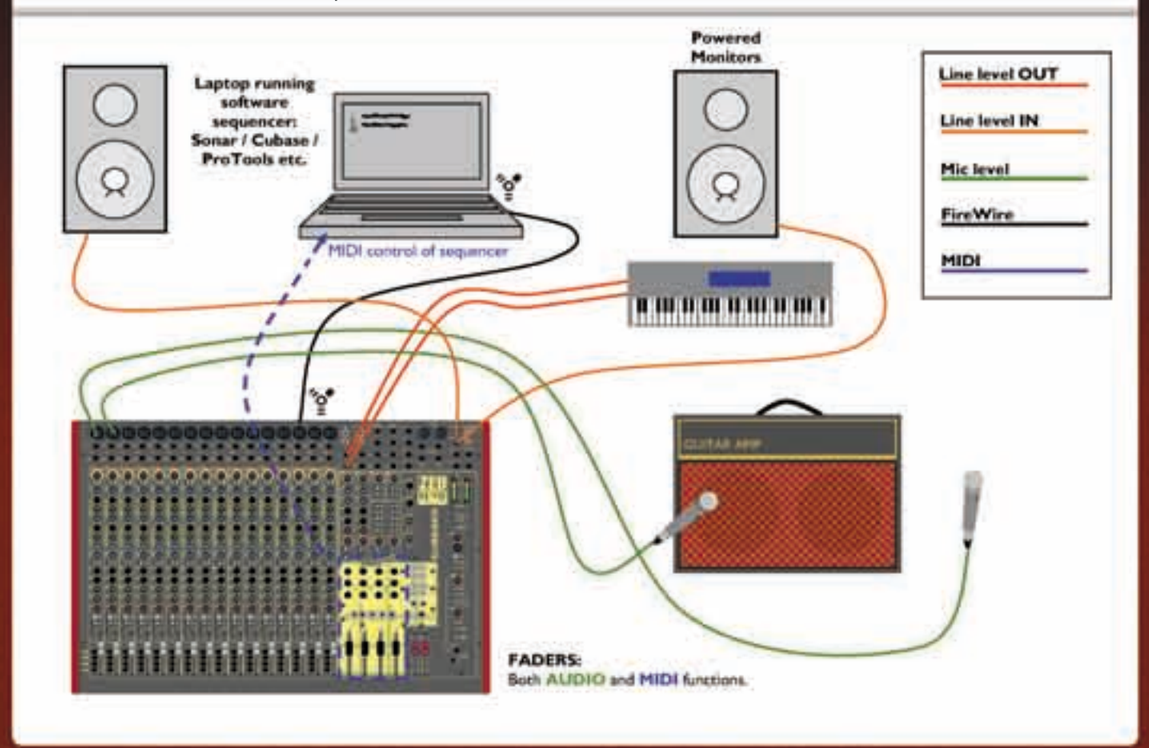


## Live Application

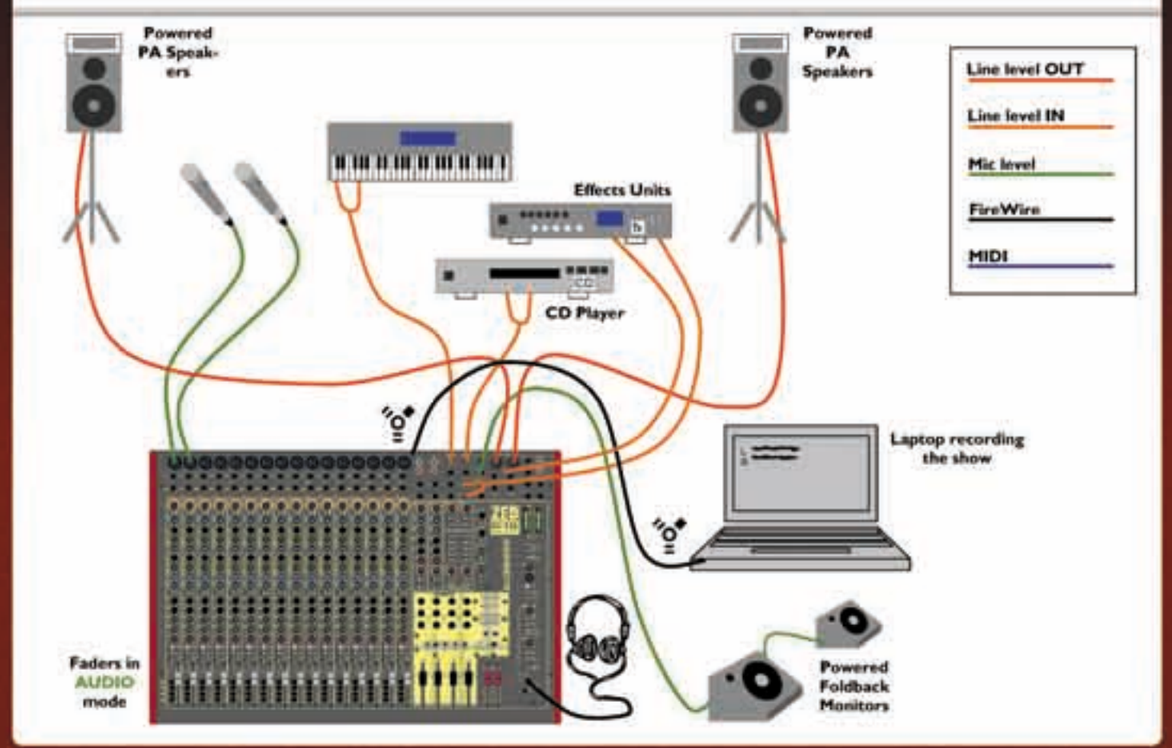


## Large Studio Setup

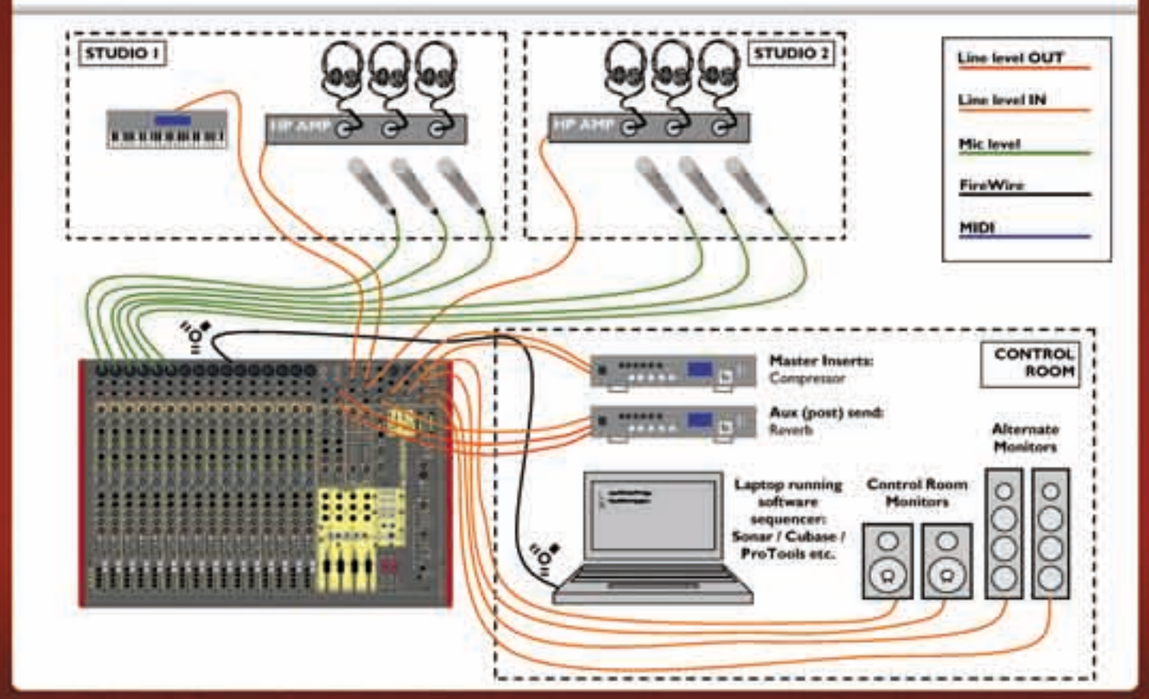


## Block Diagram